DATA OUTPUT

ABSOLUTE ZERO

DIGITAL PROTRACTOR (BASIC TYPE)

clamp for height gages (**optional**)

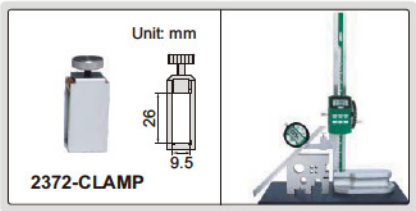

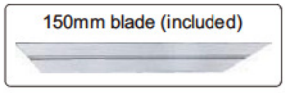

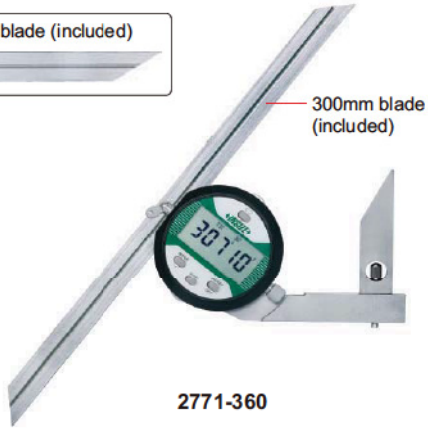

2771-360

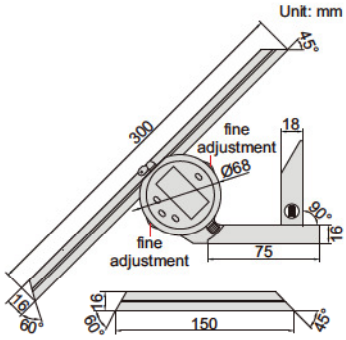

- Absolute zero, zero setting is not needed when batteries are replaced
- Button function: choose 0~90°, 0-180° or 0-360° display, change resolution, display flips over, data hold, zero, on/off supplementary angle measurement
- Battery CR2032, automatic power off, data output
- Made of stainless steel
- Optional square for zero setting
- Optional accessory: clamp (code **2372-CLAMP**), suitable for height gages **1156**, **1150-300**, **1351**, **1250** and **1151**, data output cable (code **7315-2771**, **7302-50M**)

Code	Range	Resolution	Accuracy
2771-360	0-360°	1'/0.01°	±5'

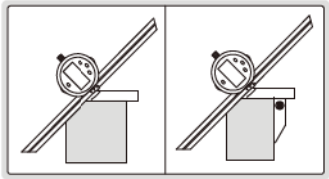

square (**optional**)

Square (for zero setting, optional)

Code
2771-S90